REAR AXLE

CONTENTS

GENERAL INFORMATION 2
SERVICE SPECIFICATIONS 3
LUBRICANTS 4
SEALANTS AND ADHESIVES 4
SPECIAL TOOLS 4
ON-VEHICLE SERVICE 7
Rear Axle Total Backlash Check 7
Gear Oil Level Check 8
Wheel Bearing Axial Play Check 8
Axle Housing Oil Seal Replacement 8
Mechanical LSD Differential Torque Check 9
AXLE ASSEMBLY 10
AXLE SHAFT 12
DIFFERENTIAL CARRIER 16

GENERAL INFORMATION

The rear axle is a banjo-type semi-floating type and provides the following characteristics:

- The rear wheel bearing is of an anti-mud enhanced type, and a mud plug, which protects muddy water from entering the inside of the brake drum, is fitted to the brake drum, improving sealing performance.
- In order to improve driveability at muddy road, mechanical LSD <4G18> or helical LSD <4G93> are available as optional equipment.
- For vehicles with ABS, the ABS rotor is press-fitted to the axle shaft.
- In order to improve stream-crossing performance, a vent plug is fitted to the upper part of the axle housing.

Item		Conventional differential	Mechanical LSD	Helical LSD
Drive gear type		Hypoid gear	Hypoid gear	Hypoid gear
Reduction ratio		4.636*1, 4.875*2, 5.111*3	5.111	4.636*1, 4.875*2
Limited slip differential type		–	Wet multi-disc type	Torque sensitive type
Differential gear type (Type × quantity)	Side gear	Straight bevel gear × 2	Straight bevel gear × 2	Helical gear × 2
	Pinion gear	Straight bevel gear × 2	Straight bevel gear × 4	Long pinion × 4, Short pinion × 4
Number of teeth	Drive gear	51*1, 39*2, 46*3	46	51*1, 39*2
	Drive pinion	11*1, 8*2, 9*3	9	11*1, 8*2
	Side gear	14	14	14
	Pinion gear	10	10	10
Bearing (O.D. × I.D.) mm	Side	80.0 × 45.2*1, *2 73.4 × 41.3*3	73.4 × 41.3	80.0 × 45.2
	Front	68.3 × 30.2*1, *2 64.3 × 30.2*3	64.3 × 30.2	68.3 × 30.2
	Rear	76.2 × 36.5	76.2 × 36.5	76.2 × 36.5

Remarks
*1: Vehicles for Hong Kong with M/T
*2: 4G93 (except vehicles for Hong Kong with M/T)
*3: 4G18

CONSTRUCTION DIAGRAM

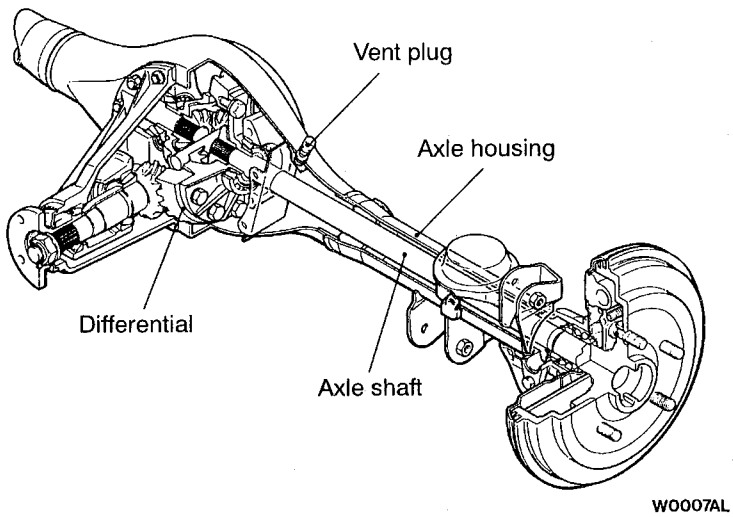

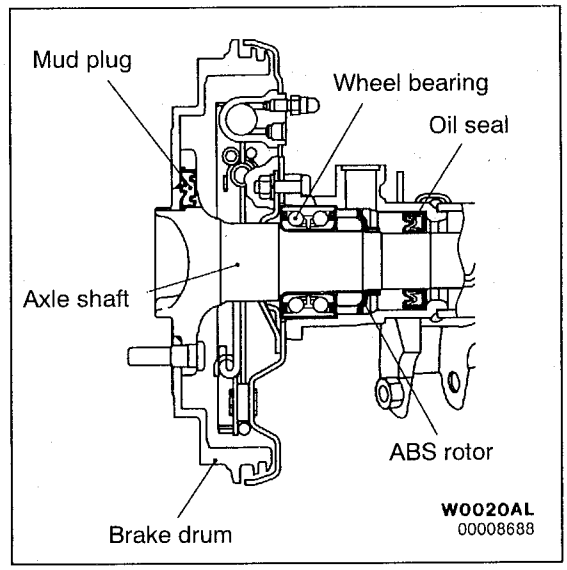

SERVICE SPECIFICATIONS

Items			Standard value	Limit
Rear axle total backlash mm			–	4.2
Wheel bearing axial play mm			–	0.025
Final drive gear backlash mm			0.1 – 0.16<4G1> 0.08 – 0.13<4G9>	–
Drive gear runout mm			–	0.05
Differential gear backlash mm			0 – 0.076 <4G1> 0.01 – 0.25 <4G9>	0.2
Drive pinion turning torque Nm	Without oil seal	When replacing with a new bearing (with rust-prevention oil)	0.59 – 0.88	–
		When using a new bearing or when reusing (gear oil application)	0.39 – 0.49	–
	With oil seal	When replacing with a new bearing (with rust-prevention oil)	0.83 – 1.13	–
		When using a new bearing or when reusing (gear oil application)	0.64 – 0.74	–
Mechanical LSD differential torque Nm		Special tool used	4.9 or more	–
		Special tool not used	9.8 or more	–
		New clutch plate assembled	49 – 78	–
		Used clutch plate reassembled	34 – 78	–
Distortion of friction plate and friction disc mm			–	0.08

Items	Standard value	Limit
Difference in thickness of friction plates, friction discs and spring plates mm	–	0.1
Difference between left and rights combined thickness of friction plate and friction disc mm	0 – 0.05	–
Clearance between spring plate and differential case mm	0.06 – 0.25	–

LUBRICANTS

Items	Specified lubricant	Quantity
Gear oil	• Conventional differential: Hypoid gear oil API classification GL-5 or higher SAE viscosity No. 90, 80W • Limited slip differential: Hypoid gear oil MITSUBISHI Genuine Gear Oil Part No. 8149630 EX, CASTROL HYPOY LS (GL-5, SAE 90), SHELL-LSD (GL-5, SAE 80W – 90) or equivalent	Approx.. 1.7 ℓ

SEALANTS AND ADHESIVES

Items	Specified sealants and adhesives	Specified sealants and adhesives
Bearing case	3M ATD Part No. 8663 or equivalent	Semi-drying sealant
Axle housing (Differential carrier installation surface)		
Drive gear threaded holes	3M Stud Locking 4170 or equivalent	Anaerobic sealant

SPECIAL TOOLS

Tool	Number	Name	Use
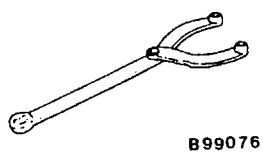	MB990767	Front hub and flange yoke holder	Measurement of mechanical LSD differential torque
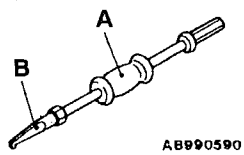	MB990590 A: MB990211 B: MB990212	Rear axle shaft oil seal remover A: Slide hammer B: Adapter	• Axle shaft removal • Axle housing oil seal removal

Tool	Number	Name	Use
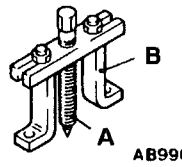 AB990241	MB990241 A: MB990242 B: MB990244	Axle shaft puller A: Puller shaft B: Puller bar	Axle shaft removal
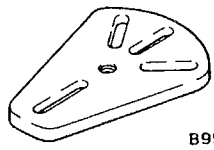 B991354	MB991354	Puller body	
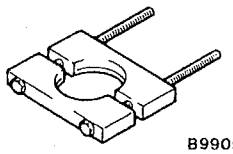 B990560	MB990560	Rear axle shaft bearing remover	Rotor removal
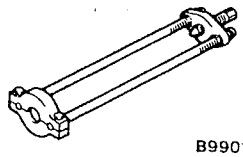 B990104	MB991284	Axle shaft bearing puller set	Axle shaft wheel bearing removal
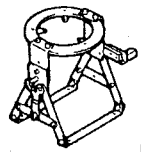 B990909	MB990909	Working base	Differential carrier fixing
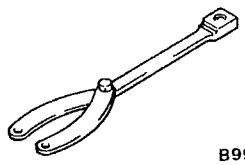 B991367	MB991367	Special spanner	Side bearing nut removal and installation
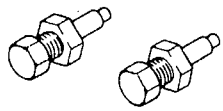 B991385	MB991385	Pin	
 B990810	MB990810	Side bearing puller	• Side bearing inner race removal • Companion flange removal
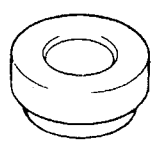 B990811	MB990811	Side bearing cup	Side bearing inner race removal

Tool	Number	Name	Use
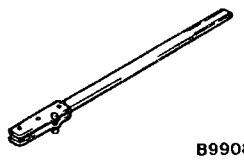 B990850	MB990850	End yoke holder	• Self-locking nut removal • Drive pinion turning torque adjustment
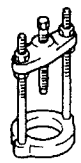 B990339	MB990339	Bearing puller	Drive pinion rear bearing inner race removal
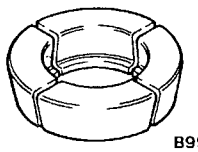 B990374	MB990648	Bearing remover	
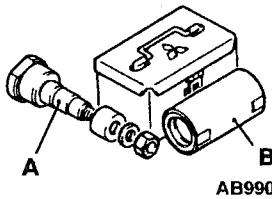 A B AB990835	MB990856 A: MB990858 B: MB990720	Drive pinion setting gauge set A: Drive pinion gauge assembly B: Cylinder gauge	Drive pinion height adjustment <4G18>
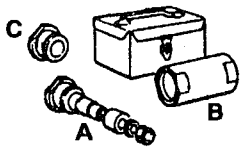 C B A	MB991171 A: MB990819 B: MB991170 C: MB991169	Drive pinion setting gauge set A: Drive pinion gauge B: Cylinder gauge C: Drive pinion gauge attachment	Drive pinion height adjustment <4G93>
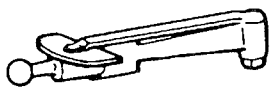	MB990685	Torque wrench	Drive pinion turning torque adjustment
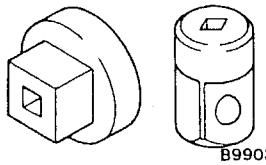 B990326	MB990326	Preload socket	
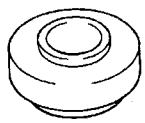 B990802	MB990802	Bearing installer	• Drive pinion rear bearing inner race press-fitting • Side bearing inner race press-fitting

Tool	Number	Name	Use
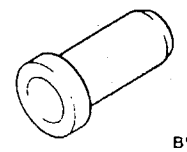 B990727	MB990727	Oil seal installer	Drive pinion oil seal press-fitting
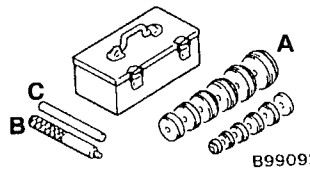 B990925	MB991171 A: MB990926 to MB990937 B: MB990938 C: MB990939	Bearing and oil seal installer set A: Installer adapter B: Bar C: Brass bar	• Oil seal press-fitting • Bearing inner and outer race removal and press-fitting For the details of installer, refer to GROUP 26 – Special Tool.
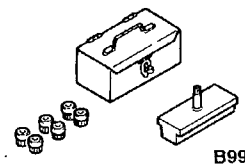 B990988	MB990988	Side gear holding tool set	Preload measurement of mechanical LSD clutch plate

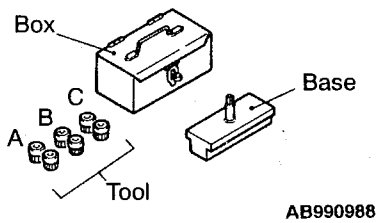

AB990988

Tool parts number	Name	Outside diameter mm
MB990551	Box	–
MB990989	Base	–
MB990990	Tool A	25
MB990991	Tool B	28
MB990992	Tool C	31

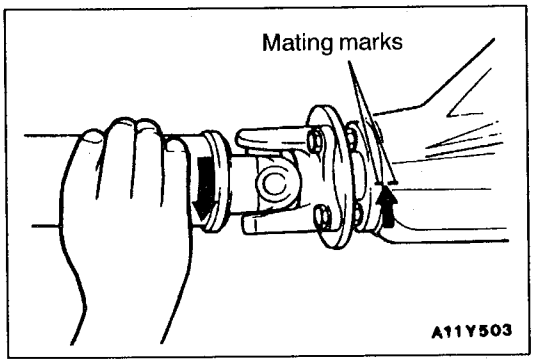

A11Y503

ON-VEHICLE SERVICE

REAR AXLE TOTAL BACKLASH CHECK

1. Place the transmission shift lever and the transfer shift lever in the neutral position, apply the parking brake and then jack up the vehicle.
2. Manually turn the propeller shaft clockwise as far as it will go and make mating marks on the companion flange dust cover and the differential carrier.

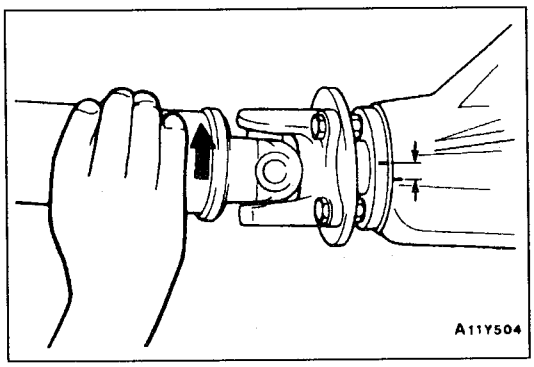
A11Y504

3. Manually turn the propeller shaft anti-clockwise as far as it will go and measure the movement of the mating marks.

   Limit: 4.2 mm

4. If the backlash exceeds the limit, remove the differential carrier assembly, and then carry out the following checks.
   Final drive gear backlash (Refer to P.27-17.)
   Differential gear backlash (Refer to P.27-17.)

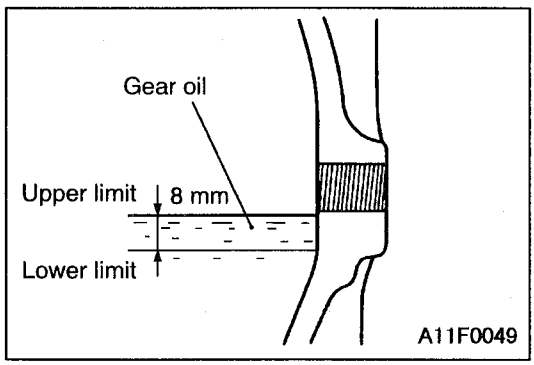

GEAR OIL LEVEL CHECK

1. Remove the filler plug.
2. Check that the gear oil level is between the upper limit (the bottom of a filler plug) and the lower limit.
3. If the gear oil level is not between the upper limit and the lower limit, add the specified gear oil unitl the gear oil level reaches the bottom of the filler plug.

   Specified gear oil:

   <Conventional differential>
   Hypoid gear oil API classification GL-5 or higher SAE viscosity No. 90, 80W

   <Limited slip differential>
   Hypoid gear oil MITSUBISHI Genuine Gear oil Part No. 8149630 EX, CASTROL HYPOY LS (GL-5, SAE90), SHELL-LSD (GL-5, SAE 80W-90) or equivalent [Quantity: 1.7 ℓ]
4. Install the filler plug, and then tighten it to the specified torque.

   Specified torque: 49 Nm

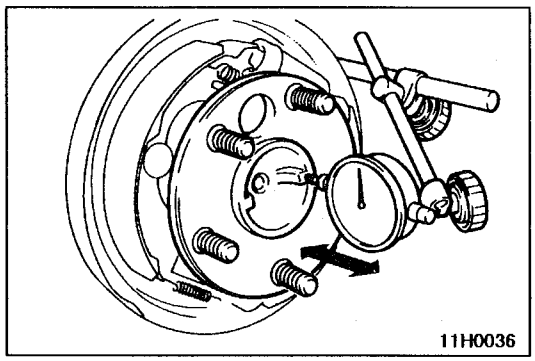

WHEEL BEARING AXIAL PLAY CHECK

1. Place a dial gauge against the axle shaft as shown in the illustration, and then move the axle shaft in the axial direction and check the axial play.

   Limit: 0.025 mm
2. If the axial play exceeds the limit, check the backing plate to axle housing tightening torque. If it is correct, replace the bearing.

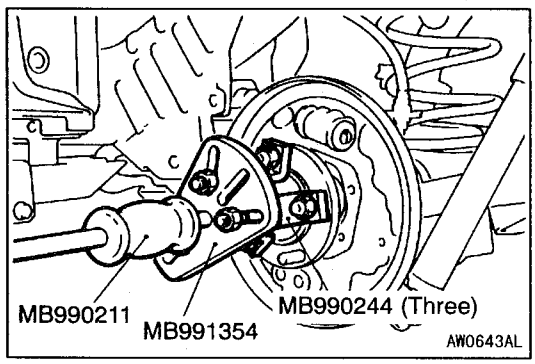

AXLE HOUSING OIL SEAL REPLACEMENT

1. Use the special tools to remove the axle shaft assembly. (Refer to P.27-12.)

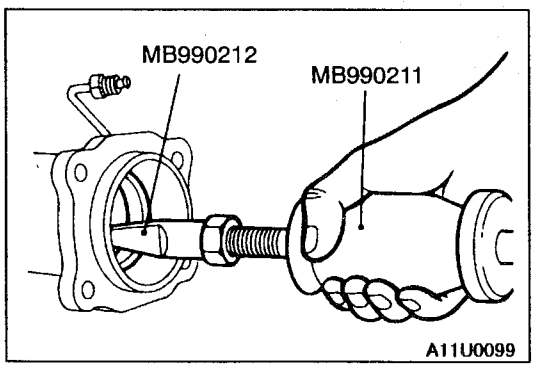

2. Use the special tools to remove the oil seal.
3. Apply multipurpose grease to the oil seal contact surface of the axle housing.

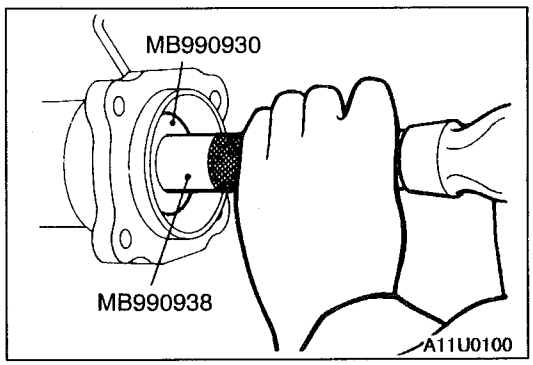

4. Use the special tools to install a new oil seal in position.
5. Apply multipurpose grease to the lip section of the oil seal.
6. Install the axle shaft assembly. (Refer to P.27-12.)

MECHANICAL LSD DIFFERENTIAL TORQUE CHECK

1. Move the shift lever to the neutral position, and then chock the front wheels.
2. Disengage the propeller shaft from the differential.
3. Release the parking brake, and raise one rear wheel while keeping the other rear wheel contacting the ground.

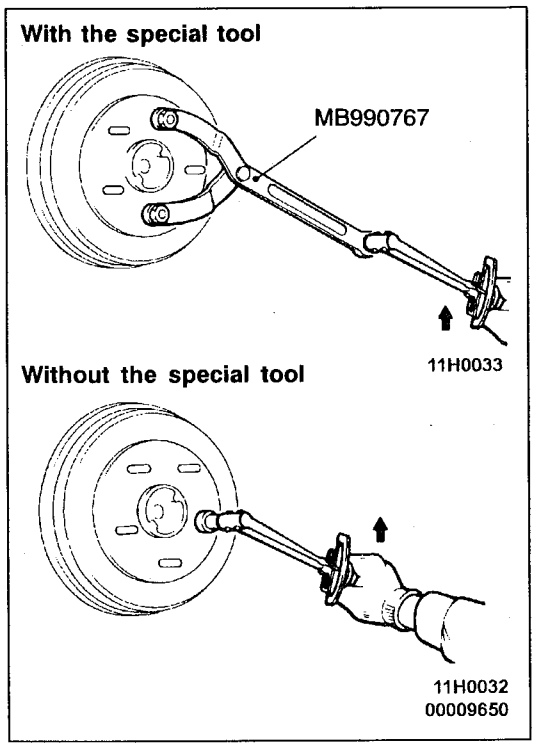

4. Measure the differential torque while rotating the raised wheel with/without the special tool.

   Standard value:

   <With the special tool> 4.9 Nm or more

   <Without the special tool> 9.8 Nm or more

   NOTE
   (1) Settle the hub by rotating it several times, and then measure the torque while rotating the wheel.
   (2) Fit a torque wrench so that it is aligned with the centres of the wheel and the wheel nut.
5. If the differential torque is out of the standard value, disassemble the LSD to check each component.

AXLE ASSEMBLY

REMOVAL AND INSTALLATION

Caution

1. **To prevent bushings from breakage, the parts indicated by * should be temporarily tightened, and then fully tightened with the vehicle on the ground in the unladen condition.**
2. **Be careful not to strike the pole piece at the tip of the wheel speed sensor against the other parts when removing and installing the wheel speed sensor.**

Pre-removal Operation
- Brake Fluid Draining (Refer to GROUP 35A – On-vehicle Service.)
- Differential Gear Oil Draining

Post-installation Operation
- Brake Fluid Filling and Air Bleeding (Refer to GROUP 35A – On-vehicle Service.)
- Parking Brake Lever Stroke Adjustment (Refer to GROUP 36 – On-vehicle Service.)
- Differential Gear Oil Filling (Refer to P.27-8.)

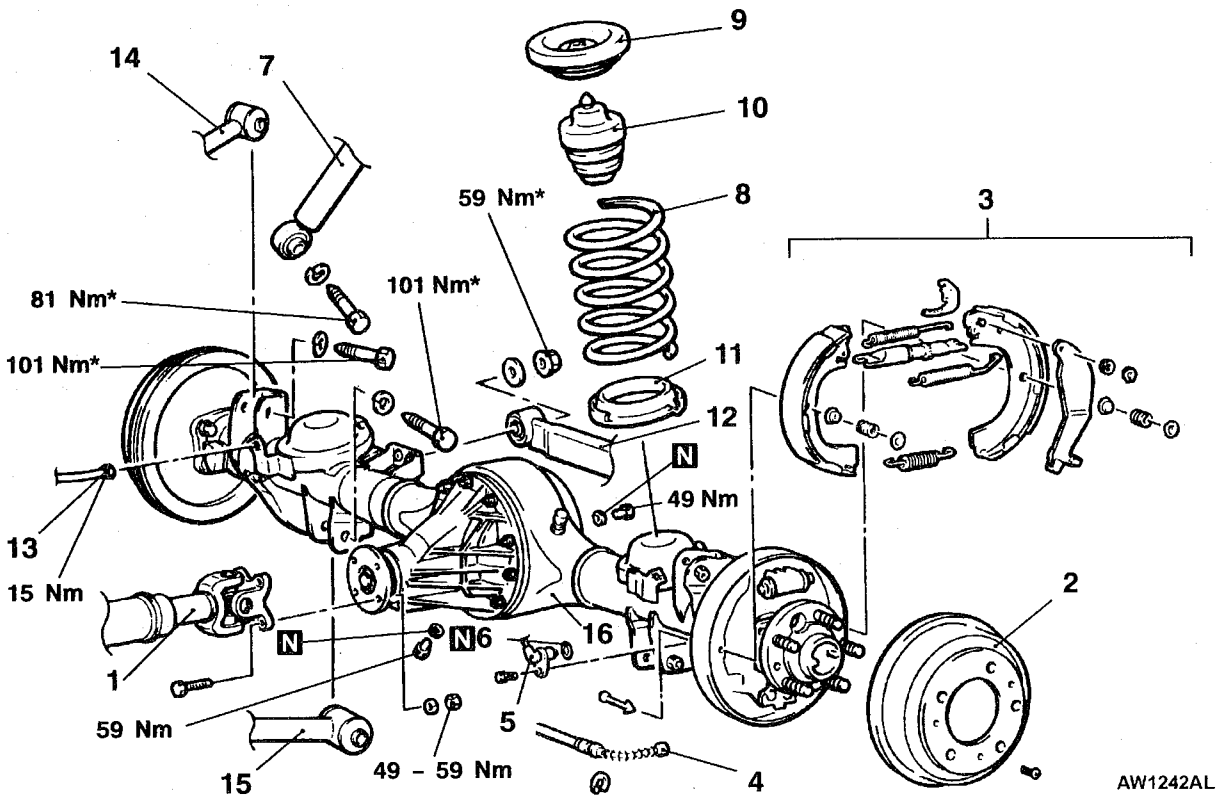

Removal steps

◀A▶
1. Rear propeller shaft connection
2. Brake drum
3. Shoe and lining assembly (Refer to GROUP 35A – Rear Drum Brake.)
4. Parking brake cable connection
5. Wheel speed sensor
6. O-ring

◀B▶
7. Shock absorber connection
8. Coil spring (Refer to GROUP 34 – Rear Suspension Assembly.)
9. Silencer sheet
10. Bump stopper
11. Lower spring pad

◀C▶
12. Lateral rod connection
13. Rear brake pipe and hose connection
14. Upper arm connection
15. Lower arm connection

◀D▶
16. Axle assembly

REMOVAL SERVICE POINTS

◀A▶ REAR PROPELLER SHAFT DISCONNECTION

Make mating marks on the companion flange and the flange yoke, and then disconnect the propeller shaft from the companion flange.

Caution
Use a wire, etc. to suspend the propeller shaft from the body to prevent it from falling.

◀B▶ SHOCK ABSORBER DISCONNECTION

Support the axle housing with a jack before removing the shock absorber lower mounting nut.

◀C▶ LATERAL ROD DISCONNECTION

Disconnect the lateral rod from the axle assembly, and then use a wire, etc. to suspend the lateral rod to prevent it from falling.

◀D▶ AXLE ASSEMBLY REMOVAL

Take out the axle assembly toward the rear of vehicle.

Caution
Take out the axle assembly carefully and slowly. The axle assembly is heavy and unstable and may fall.

AXLE SHAFT

REMOVAL AND INSTALLATION

Pre-removal Operation
Brake Fluid Draining (Refer to GROUP 35A – On-vehicle Service.)

Post-installation Operation
- Brake Fluid Filling and Air Bleeding (Refer to GROUP 35A – On-vehicle Service.)
- Parking Brake Lever Stroke Adjustment (Refer to GROUP 36 – On-vehicle Service.)

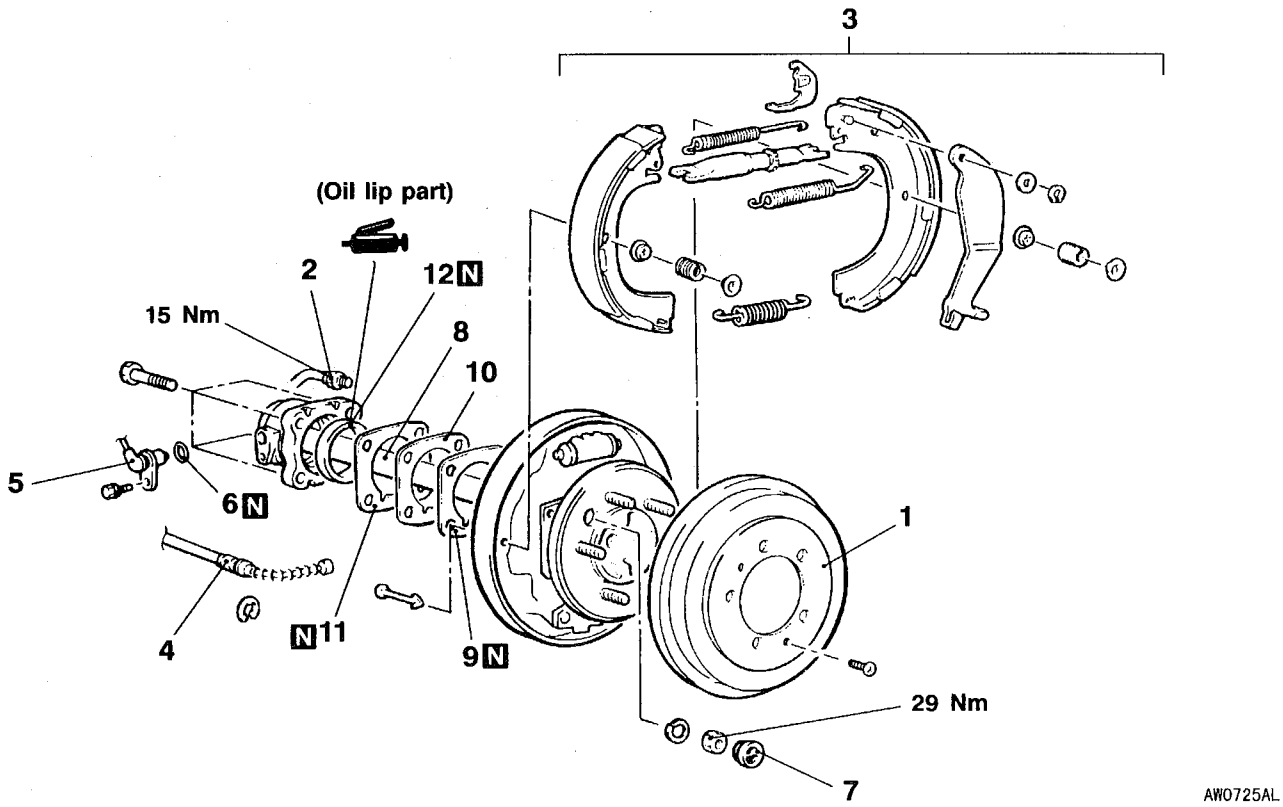

Removal steps

1. Brake drum
2. Rear brake pipe connection
3. Shoe and lining assembly (Refer to GROUP 35A – Rear Drum Brake.)
4. Parking brake cable connection
5. Wheel speed sensor
6. O-ring
7. Plug
◀A▶ 8. Axle shaft assembly
▶B◀ 9. Packing(s)
▶B◀ 10. Shim(s)
▶B◀ 11. Packing(s)
◀B▶ ▶A◀ 12. Oil seal

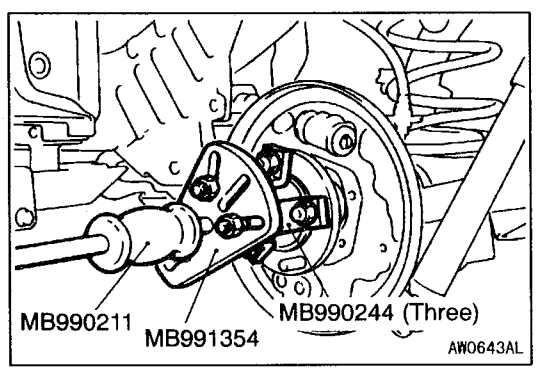

REMOVAL SERVICE POINTS

◀A▶ AXLE SHAFT ASSEMBLY REMOVAL

Use the special tools to remove the axle shaft assembly.

Caution
Be careful not to damage the oil seal when pulling the axle shaft.

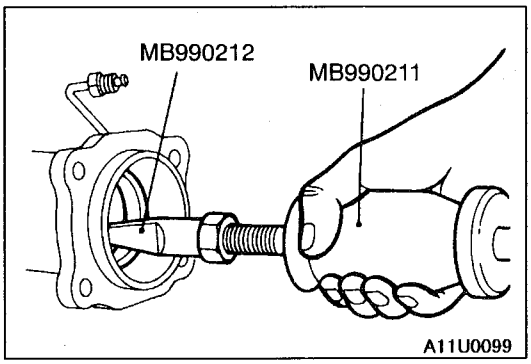

◀B▶ OIL SEAL REMOVAL

Use the special tools to remove the oil seal.

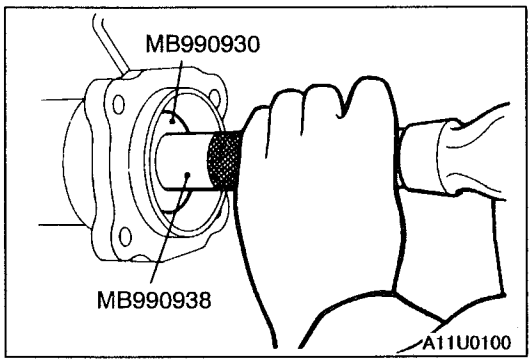

INSTALLATION SERVICE POINTS

▶A◀ OIL SEAL INSTALLATION

Use the special tools to tap in the oil seal.

▶B◀ PACKING/SHIM INSTALLATION

1. When only removing and reinstalling the axle shaft, the same thickness and number of shims as before should be used.
2. When replacing the axle shaft or the wheel bearing, select the packing(s) and shim(s) to adjust the bearing outer retainer tightening condition by the following procedure.
   (1) Insert the axle shaft assembly into the axle housing without packing(s) and shim(s). Temporarily tighten the installation nuts to half of specified torque (until the bearing outer race contacts the axle housing) evenly in diagonal order in two steps.
   (2) Use a thickness gauge to measure the clearance between the axle housing and the backing plate, and then select the packing(s) and shim(s) according to the following table.

   NOTE
   New packing is 0.27 mm to 0.33 mm in thickness, and new shim is 0.3 mm in thickness.

Clearance mm	Number of packing	Number of shim
0.2	0	0
0.2 – 0.5	1	0
0.5 – 0.75	2	0
0.75 – 1.0	2	1
1.0 – 1.25	2	2

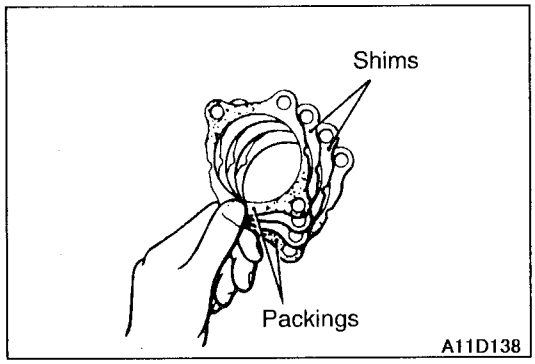

(3) If using the shim(s), sandwich the shim(s) between the packings as shown in the illustration.

3. Install the axle shaft assembly. Tighten the nuts in a diagonal order to the specified torque.

Specified torque: 29 Nm

DISASSEMBLY AND REASSEMBLY

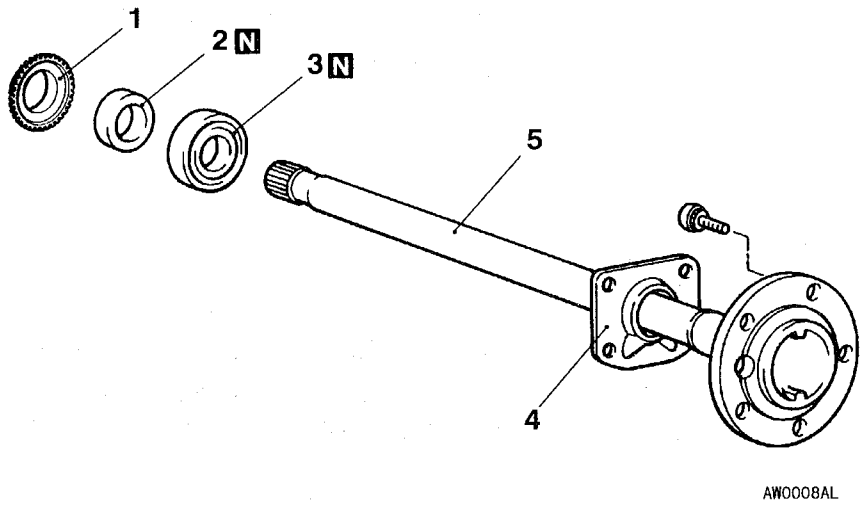

Disassembly steps

◀A▶ 1. ABS rotor <Vehicles with ABS>
◀B▶ ▶A◀ 2. Bearing inner retainer
◀C▶ ▶A◀ 3. Wheel bearing
▶A◀ 4. Bearing outer retainer
5. Axle shaft

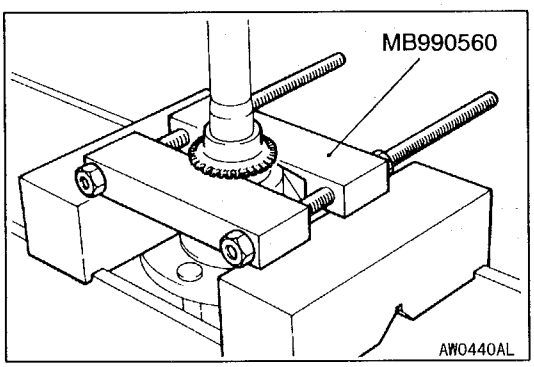

DISASSEMBLY SERVICE POINTS

◀A▶ ABS ROTOR REMOVAL

Use the special tool to press out the ABS rotor.

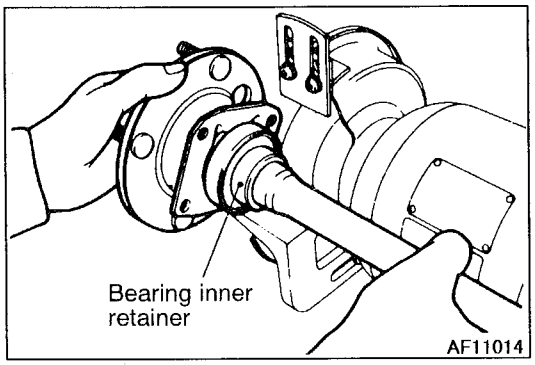

◀B▶ BEARING INNER RETAINER REMOVAL

1. Use a grinder to shave off a part of the bearing inner retainer until its thickness becomes 1 to 1.5 mm.

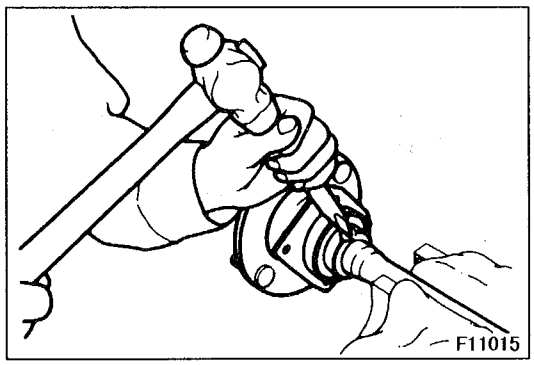

2. Use a chisel to cut the shaven part of the bearing inner retainer, and then remove the bearing inner retainer.

Caution
Be careful not to damage the axle shaft.

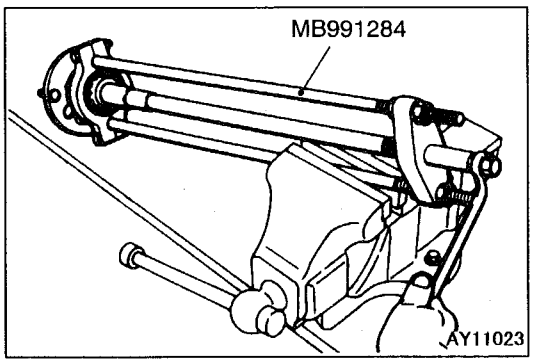

◀C▶ WHEEL BEARING REMOVAL

Use the special tool to remove the wheel bearing.

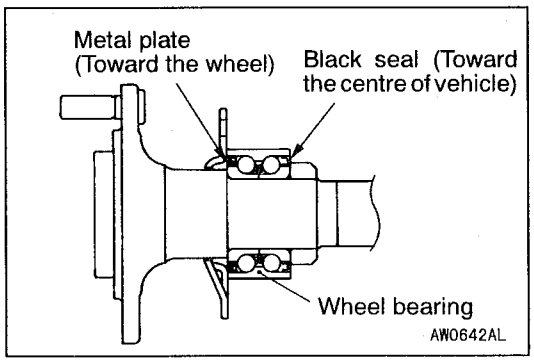

REASSEMBLY SERVICE POINT

▶A◀ BEARING OUTER RETAINER/WHEEL BEARING/ BEARING INNER RETAINER INSTALLATION

1. Install the bearing outer retainer, wheel bearing and the bearing inner retainer to the axle shaft in that order, as shown in the illustration.
2. Press-fit the bearing inner retainer to the axle shaft.

Caution
Install the wheel bearing as shown in the illustration.

DIFFERENTIAL CARRIER

REMOVAL AND INSTALLATION

Pre-removal Operation
- Differential Gear Oil Draining
- Axle Shaft Removal (Refer to P.27-12.)
- Brake Fluid Draining (Refer to GROUP 35A – On-vehicle Service.)

Post-installation Operation
- Brake Fluid Filling and Air Bleeding (Refer to GROUP 35A – On-vehicle Service.)
- Axle Shaft Installation (Refer to P.27-12.)
- Differential Gear Oil Filling (Refer to P.27-8.)

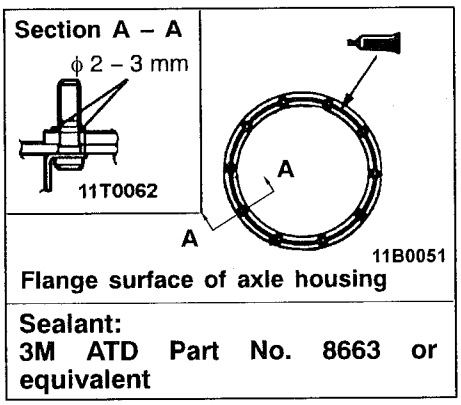

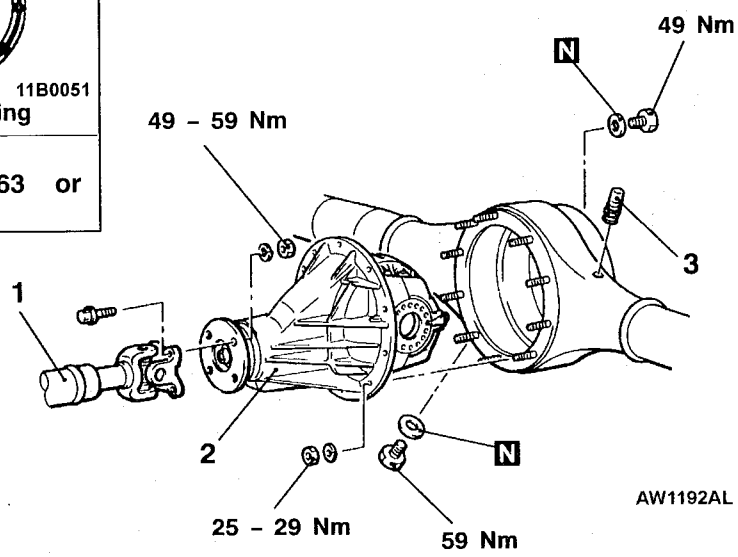

Removal steps

◀A▶ ▶A◀ 1. Rear propeller shaft connection
◀B▶ 2. Differential carrier assembly
3. Vent plug

REMOVAL SERVICE POINTS

◀A▶ REAR PROPELLER SHAFT DISCONNECTION

Make mating marks on the companion flange and the flange yoke, and then disconnect the propeller shaft from the companion flange.

Caution
Use a wire, etc. to suspend the propeller shaft from the body to prevent it from falling.

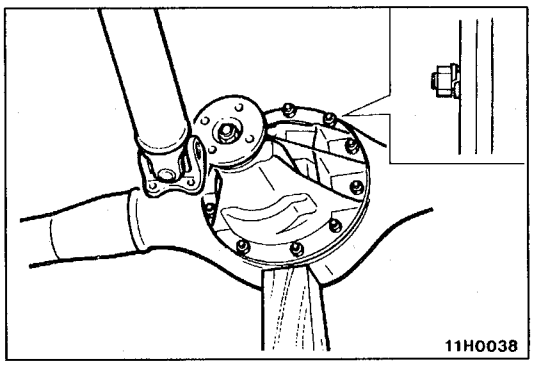

◀B▶ DIFFERENTIAL CARRIER REMOVAL

Loosen the differential carrier mounting nuts to the end of each stud bolt, and then strike the lower part of differential carrier with a piece of timber several times to separate the differential carrier from the axle housing.

Caution

1. **Do not remove the differential carrier mounting nuts so that the differential carrier will not fall when separating it from the axle housing.**
2. **Do not strike the companion flange.**

INSTALLATION SERVICE POINTS

▶A◀ REAR PROPELLER SHAFT CONNECTION

Connect the propeller shaft so that the mating marks on the flange yoke and the companion flange of differential carrier are aligned.

INSPECTION BEFORE DISASSEMBLY

For the inspection procedure except for the standard values below, refer to GROUP 26 – Inspection Before Disassembly.

FINAL DRIVE GEAR BACKLASH

Standard value:
0.11 – 0.16 mm <4G1>
0.08 – 0.13 mm <4G9>

DIFFERENTIAL GEAR BACKLASH

Standard value:
0 – 0.076 mm <4G1>
0.01 – 0.25 mm <4G9>

DISASSEMBLY

Caution
Do not disassemble the limited slip differential case assembly (helical gear type), because it is not possible to assemble.

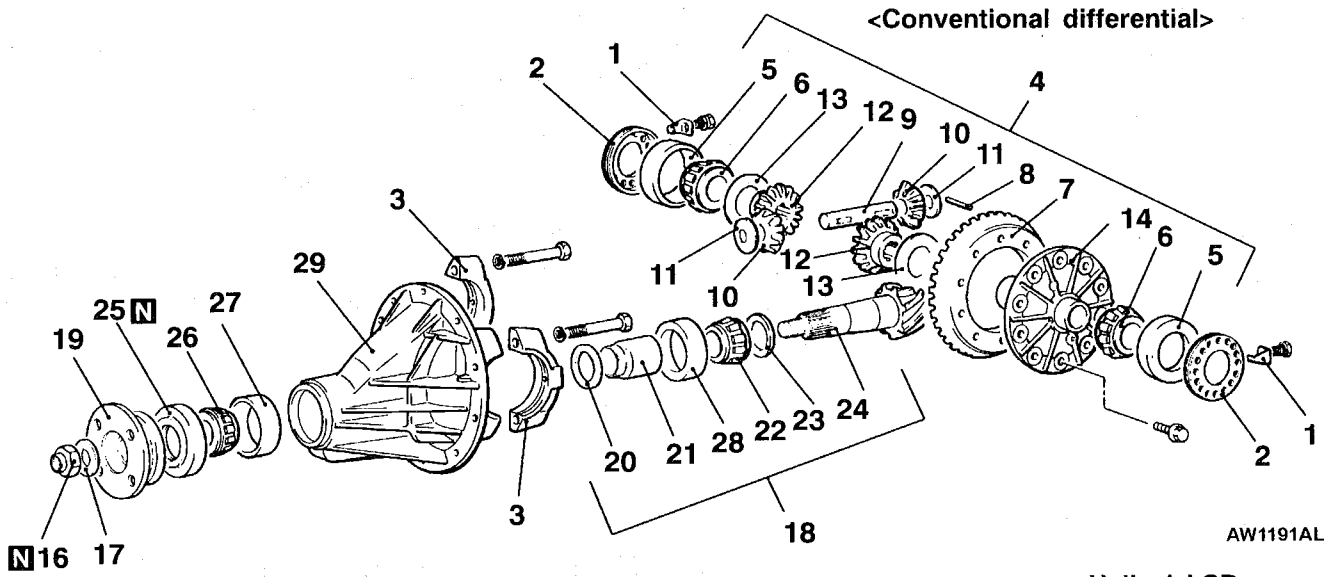

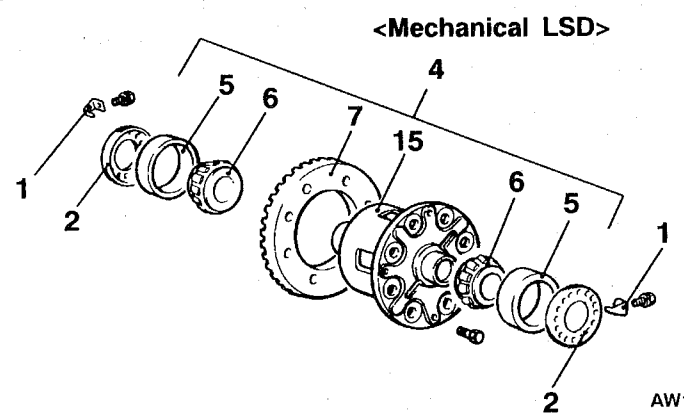

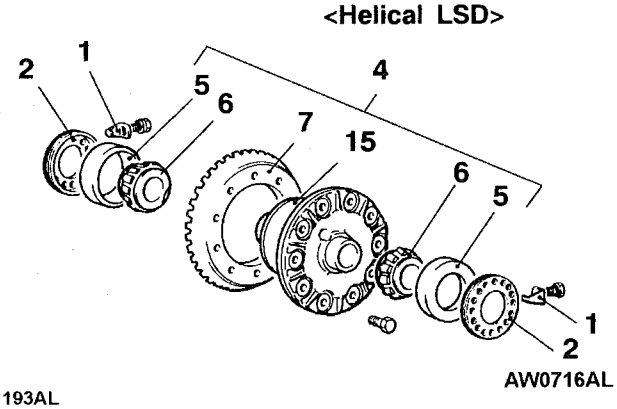

Disassembly steps

- Inspection before disassembly (Refer to P.27-17.)

1. Locking plate
◀A▶ 2. Side bearing nut
3. Bearing cap
◀B▶ 4. Differential case assembly
5. Side bearing outer race
◀C▶ 6. Side bearing inner race
◀D▶ 7. Drive gear
8. Lock pin
9. Pinion shaft
10. Pinion gear
11. Pinion washer
12. Side gear
13. Side gear spacer
14. Differential case
15. Limited slip differential case assembly
◀E▶ 16. Self-locking nut
17. Washer
◀F▶ 18. Drive pinion assembly
◀F▶ 19. Companion flange
20. Drive pinion front shim (for drive pinion turning torque adjustment)
21. Drive pinion spacer
◀G▶ 22. Drive pinion rear bearing inner race
23. Drive pinion rear shim (for drive pinion height adjustment)
24. Drive pinion
◀H▶ 25. Oil seal
◀H▶ 26. Drive pinion front bearing inner race
◀H▶ 27. Drive pinion front bearing outer race
◀I▶ 28. Drive pinion rear bearing outer race
29. Differential carrier

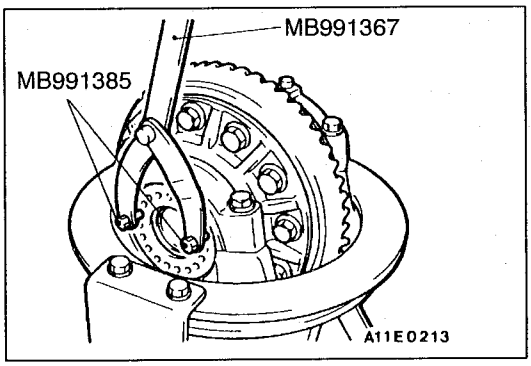

DISASSEMBLY SERVICE POINTS

◀A▶ SIDE BEARING NUT REMOVAL

Use the special tools to remove the side bearing nuts.

NOTE
Keep the right and left side bearing nuts separate, so that they will not be confused when assembling.

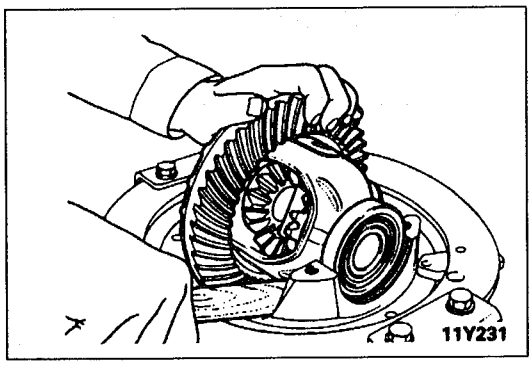

◀B▶ DIFFERENTIAL CASE ASSEMBLY REMOVAL

Use the handle of hammer to pry up the differential case assembly.

Caution
Remove the differential case assembly, slowly and carefully so that the side bearing outer races are not dropped.

NOTE
Keep the right and left side bearing outer races separate, so that they will not be confused when assembling.

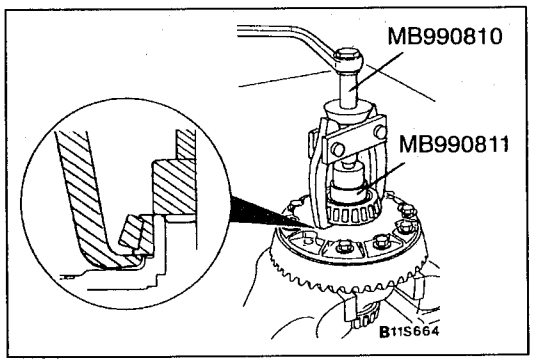

◀C▶ SIDE BEARING INNER RACE REMOVAL

Use the special tools to pull out the side bearing inner race.

NOTE
Position the two prongs of the special tool under the bottom of the side bearing inner race through the two notches in the differential case.

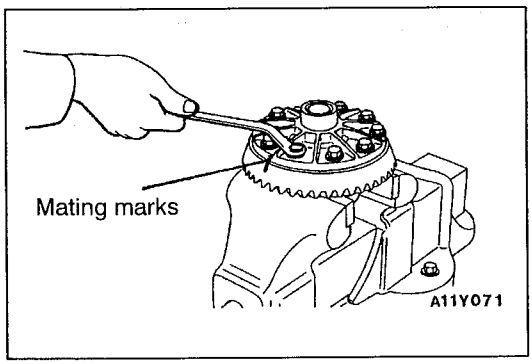

◀D▶ DRIVE GEAR REMOVAL

1. Make the mating marks to the differential case and the drive gear in order to position the drive gear correctly when assembling it.
2. Loosen the drive gear attaching bolts in diagonal sequence to remove the drive gear.

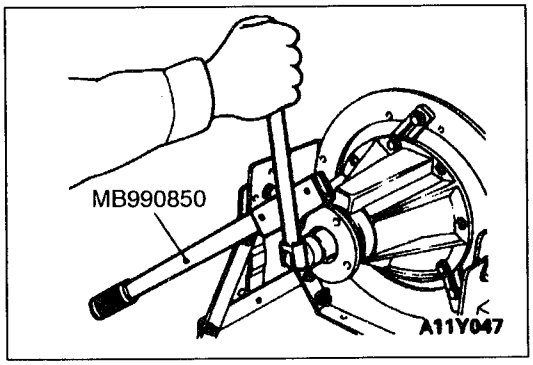

◀E▶ SELF-LOCKING NUT REMOVAL

Use the special tool to hold the companion flange, and then remove the self-locking nut.

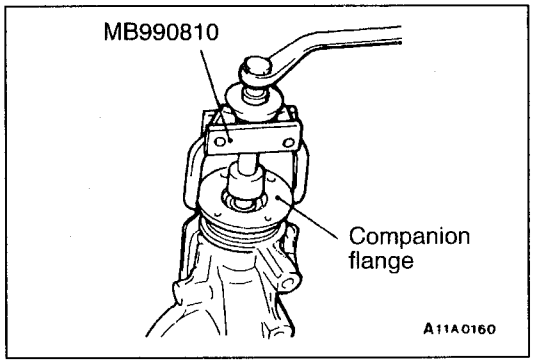

◀F▶ DRIVE PINION ASSEMBLY/COMPANION FLANGE REMOVAL

1. Make the mating marks on the drive pinion and the companion flange in order to position the companion flange correctly when assembling it.

   Caution
   Do not make mating mark on the surface that contacts with the propeller shaft.

2. Use the special tool to remove the companion flange.

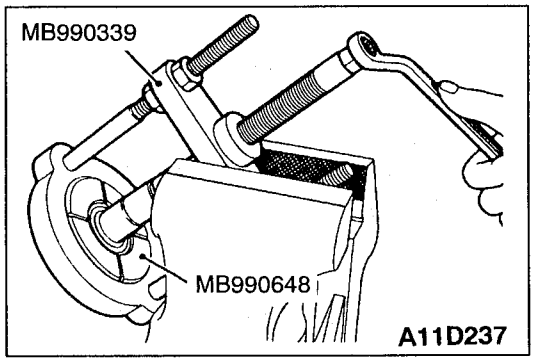

◀G▶ DRIVE PINION REAR BEARING INNER RACE REMOVAL

Use the special tools to remove the drive pinion rear bearing inner race.

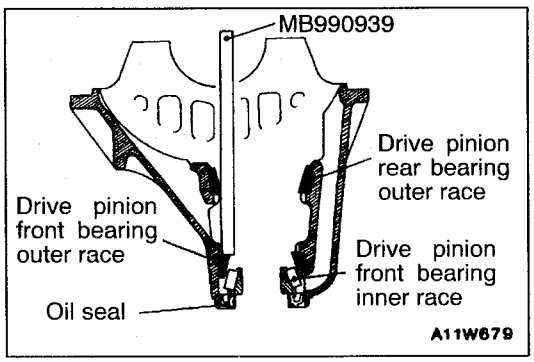

◀H▶ OIL SEAL/DRIVE PINION FRONT BEARING INNER RACE/DRIVE PINION FRONT BEARING OUTER RACE REMOVAL

Use the special tool to remove the drive pinion front bearing outer race, drive pinion front bearing inner race and oil seal.

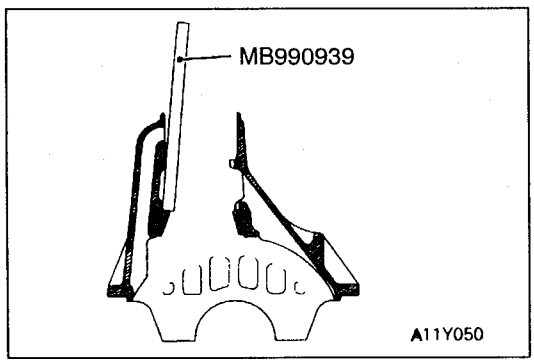

◀I▶ DRIVE PINION REAR BEARING OUTER RACE REMOVAL

Use the special tool to remove the drive pinion rear bearing outer race.

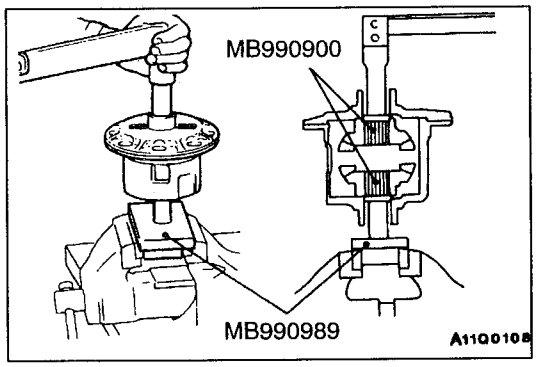

MECHANICAL LSD DIFFERENTIAL TORQUE CHECK

1. Use the special tools to measure the differential torque.

   Standard value:

When new clutch plate(s) are assembled Nm	When old clutch plate(s) are reassembled Nm
49 – 78	34 – 78

   NOTE
   Rotate a torque wrench several times until the gears seat, and then measure the differential torque while rotating the gears.

2. If it is outside the standard value, disassemble the LSD case assembly to check the internal components.

REASSEMBLY

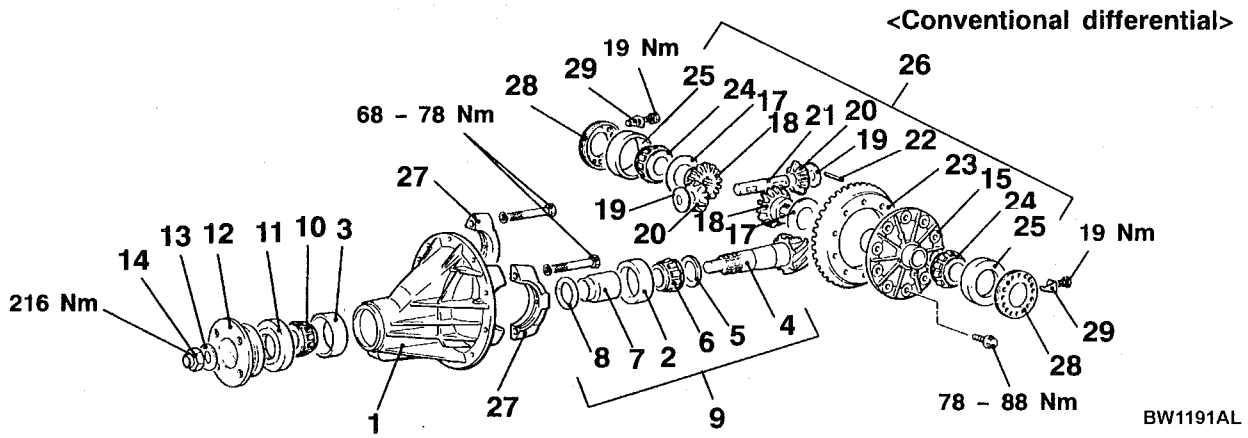

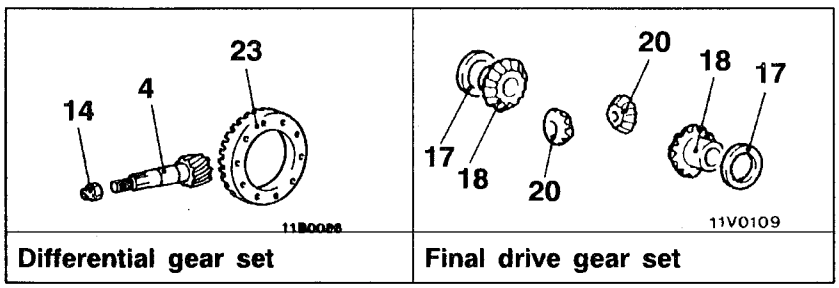

Differential gear set

Final drive gear set

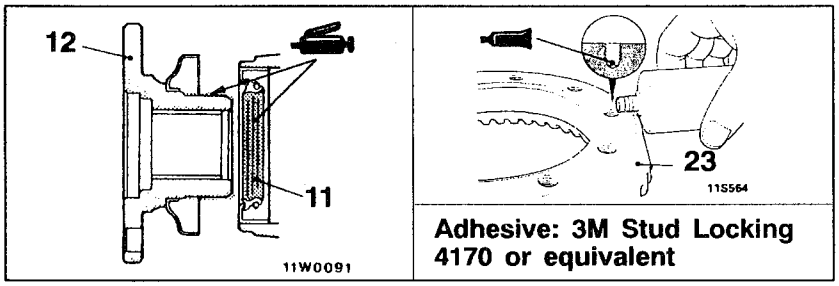

Adhesive: 3M Stud Locking 4170 or equivalent

<Helical LSD>

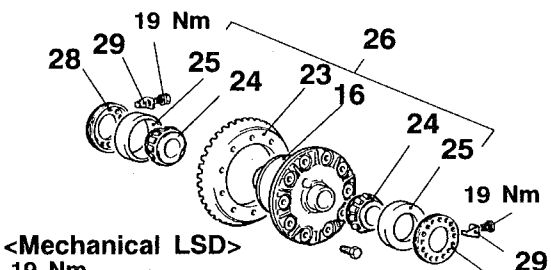

<Mechanical LSD>

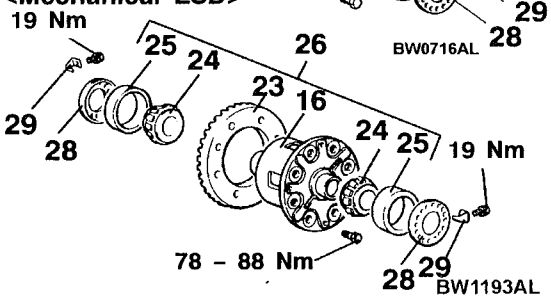

Reassembly steps

1. Differential carrier
- ▶A◀ 2. Drive pinion rear bearing outer race
- ▶B◀ 3. Drive pinion front bearing outer race
- ▶C◀ • Drive pinion height adjustment
4. Drive pinion
5. Drive pinion rear shim (for drive pinion height adjustment)
6. Drive pinion rear bearing inner race
7. Drive pinion spacer
- ▶D◀ • Drive pinion turning torque adjustment
8. Drive pinion front shim (for drive pinion turning torque adjustment)
9. Drive pinion assembly
10. Drive pinion front bearing inner race
11. Oil seal
12. Companion flange
13. Washer
14. Self-locking nut
15. Differential case
16. Limited slip differential case assembly
- ▶E◀ • Differential gear backlash adjustment
17. Side gear spacer
18. Side gear
19. Pinion washer
20. Pinion gear
21. Pinion shaft
22. Lock pin
- ▶F◀ 23. Drive gear
- ▶G◀ 24. Side bearing inner race
25. Side bearing outer race
26. Differential case assembly
- ▶H◀ 27. Bearing cap
- ▶I◀ • Drive gear backlash adjustment
28. Side bearing nut
29. Locking plate

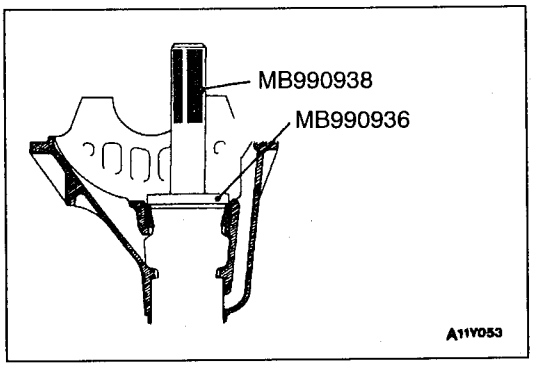

REASSEMBLY SERVICE POINTS

▶A◀ DRIVE PINION REAR BEARING OUTER RACE PRESS-FITTING

Use the special tools to tap in the drive pinion rear bearing outer race.

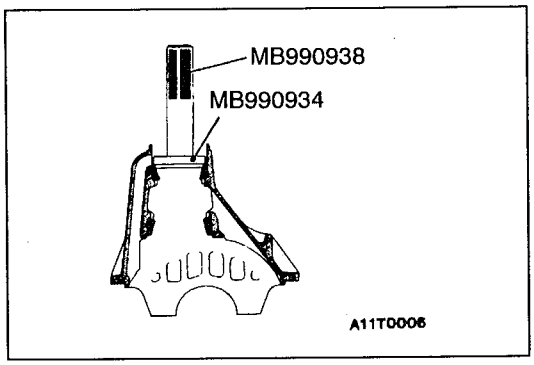

▶B◀ DRIVE PINION FRONT BEARING OUTER RACE PRESS-FITTING

Use the special tools to tap in the drive pinion front bearing outer race.

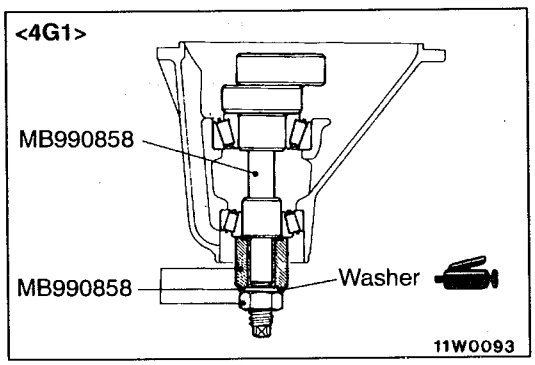

▶C◀ DRIVE PINION HEIGHT ADJUSTMENT

Adjust the drive pinion height by the following procedures:

1. Apply multipurpose grease to the washer of special tool.
2. Install the special tools and drive pinion front and rear bearing inner races to the differential carrier in the sequence shown in the illustration.

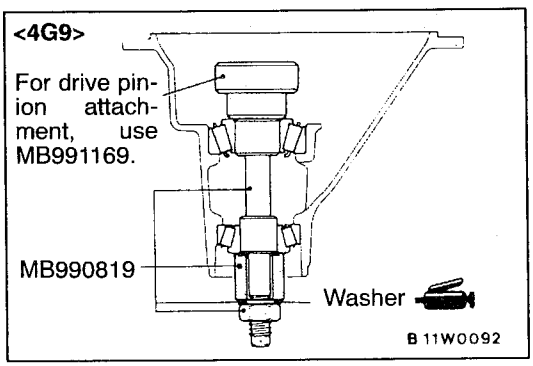

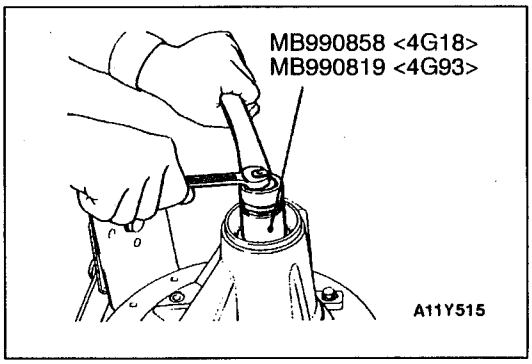

3. Gradually tighten the nut of the special tool while checking the drive pinion turning torque until the standard value of drive pinion turning torque (without oil seal) is obtained.

Standard value:

Bearing	Bearing lubrication	Turning torque Nm
New	None (with anti-rust agent)	0.59 – 0.88
New or reusing	Gear oil applied	0.39 – 0.49

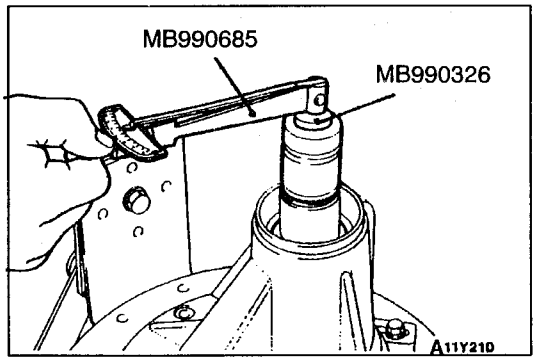

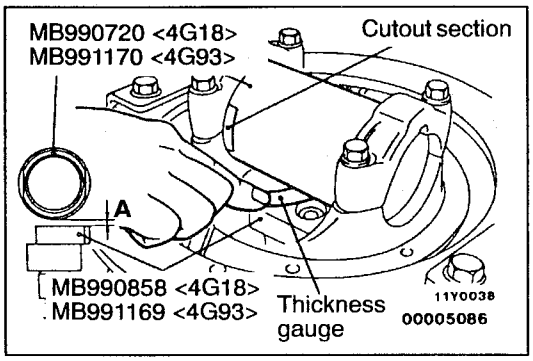

4. Clean the side bearing seat thoroughly.
5. Set the special tool on the side bearing seats, and position the cutout section as shown in the illustration. Then confirm that the special tool contacts with the side bearing seats completely.
6. Use a thickness gauge to measure the clearance (A) between the special tools.

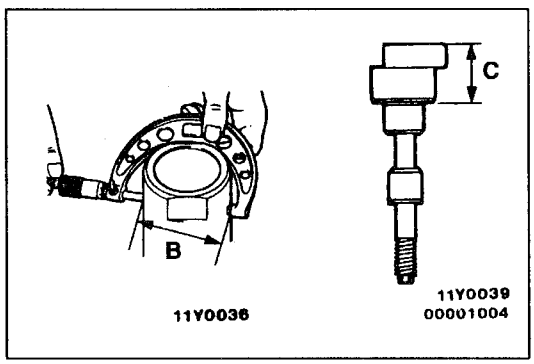

7. Remove special tools MB990720, MB990858, MB991169 and MB991170.
8. Use a micrometer to measure dimensions (B) and (C) of the special tools.

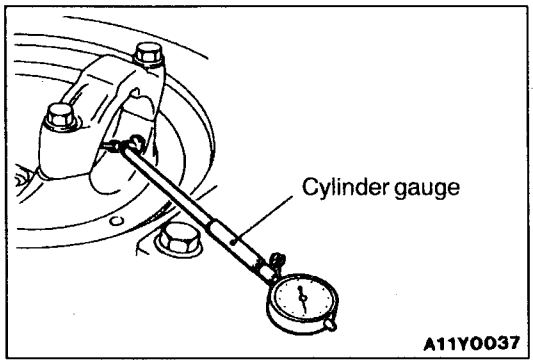

9. Install the bearing cap, and then use a cylinder gauge and the micrometer to measure the inside diameter (D) of the bearing cap as shown in the illustration.
10. Calculate the thickness (F) of the drive pinion rear shim from the following equation, and select the shim that is closest in thickness to this value.

$$F = A + B + C - 1/2\ D - 100$$

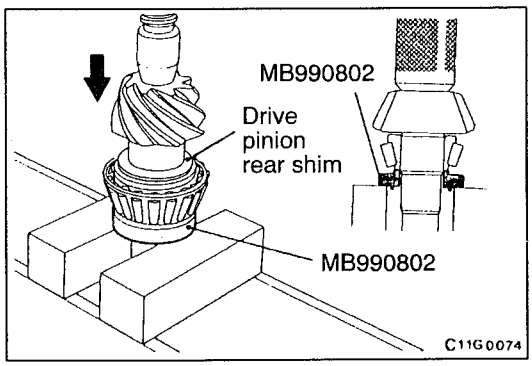

11. Fit the selected drive pinion rear shim(s) to the drive pinion, and press-fit the drive pinion rear bearing inner race by using the special tool.

▶D◀ DRIVE PINION TURNING TORQUE ADJUSTMENT

Adjust the drive pinion turning torque by using the following procedure:

1. Insert the drive pinion into the differential carrier, and then install the drive pinion spacer, the drive pinion front shim, the drive pinion front bearing inner race, and the companion flange in that order.

   NOTE
   Do not install the oil seal.

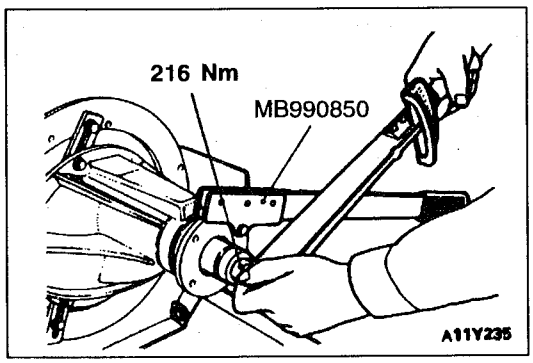

2. Use the special tool to hold the companion flange, and then tighten the companion flange self-locking nut to the specified torque.

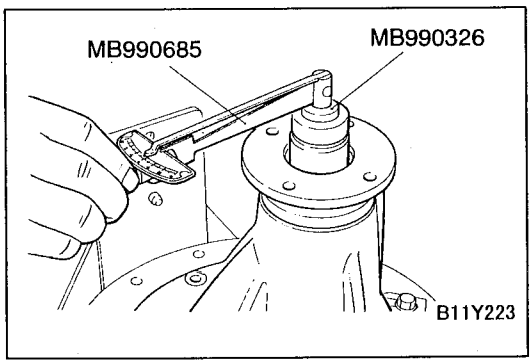

3. Use the special tool to measure the drive pinion turning torque (without the oil seal).

   Standard value:

Bearing	Bearing lubrication	Turning torque Nm
New	None (with anti-rust agent)	0.59 – 0.88
New or reusing	Gear oil applied	0.39 – 0.49

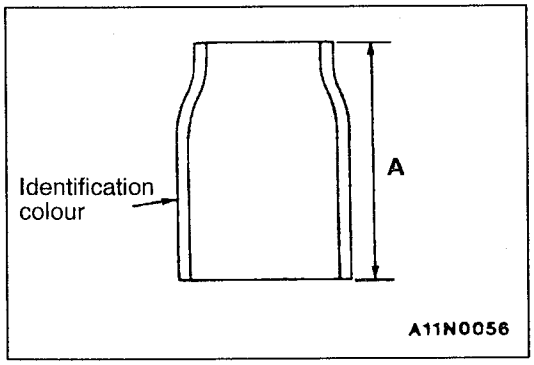

4. If the drive pinion turning torque is not within the standard value, adjust the turning torque by replacing the drive pinion front shim(s) or the drive pinion spacer.

   NOTE
   When selecting the drive pinion front shims, if the number of shims is large, reduce the number of shims to a minimum by selecting the drive pinion spacer.
   Select either of the following drive pinion spacers.

Height (A) of drive pinion spacer mm		Identification colour
4G18	46.67	White
	47.01	–
4G93	56.67	–
	57.01	White

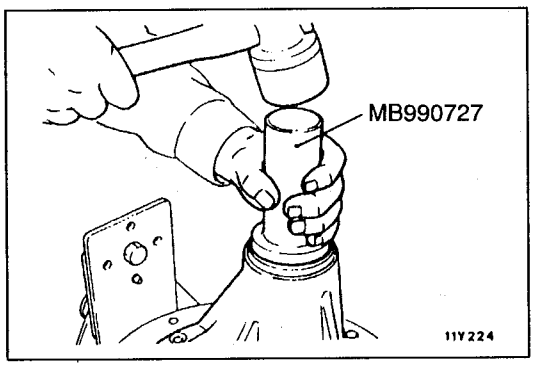

5. Remove the companion flange and drive pinion once again. Insert the drive pinion front bearing inner race into the differential carrier, and then use the special tool to tap in the oil seal into the differential carrier.

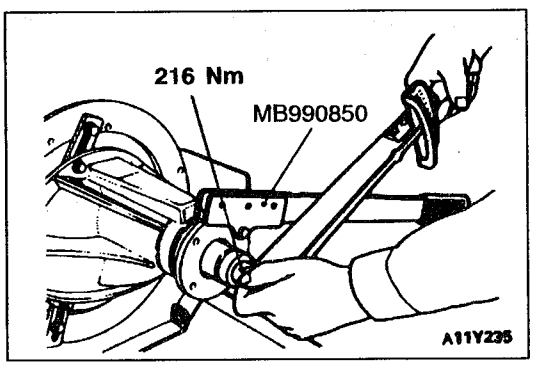

6. Install the drive pinion assembly and the companion flange with mating marks properly aligned. Install the new self-locking nut, then use the special tool to hold the companion flange, and tighten the self-locking nut to the specified torque.

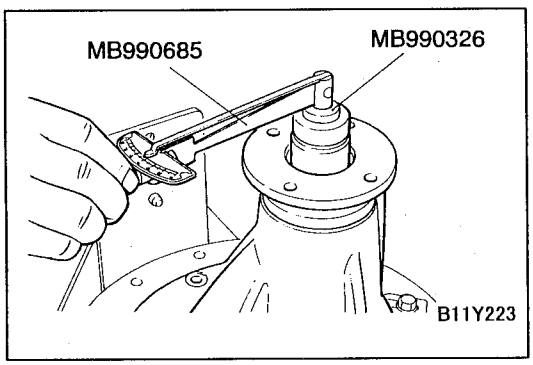

7. Use the special tool to check that the drive pinion turning torque (with the oil seal) is within the standard value.

Standard value:

Bearing	Bearing lubrication	Turning torque Nm
New	None (with anti-rust agent)	0.83 – 1.13
New or reusing	Gear oil applied	0.64 – 0.74

8. If the drive pinion turning torque is not within the standard value, check the tightening torque of the companion flange self-locking nut and the oil seal installation condition.

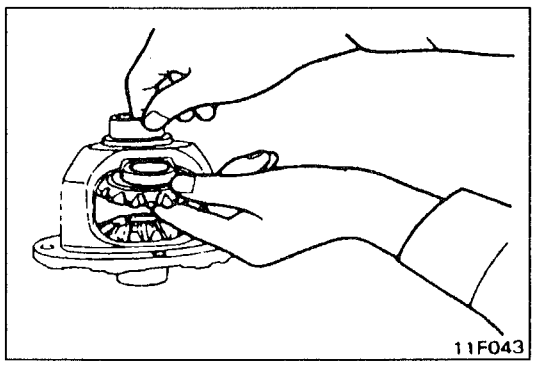

▶E◀ DIFFERENTIAL GEAR BACKLASH ADJUSTMENT

Adjust the differential gear backlash by the following procedures:

1. Assemble the side gears, side gear spacers, pinion gears and pinion washers into the differential case.
2. Temporarily install the pinion shaft.

   NOTE
   Do not drive in the lock pin yet.

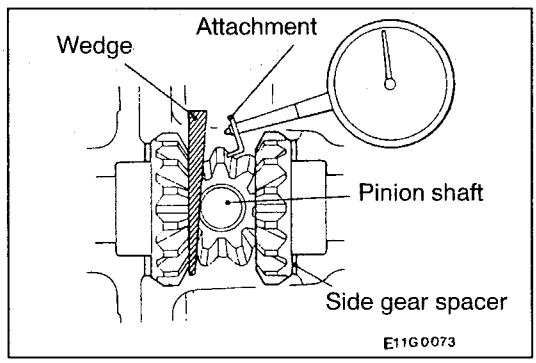

3. Insert a wooden wedge between the side gear and the pinion shaft to lock the side gear.
4. Measure the differential gear backlash with a dial indicator on the pinion gear.

   NOTE
   The measurement should be made for both pinion gears individually.

   Standard value:
   0 – 0.076 mm <4G1>
   0.01 – 0.25 mm <4G9>

   Limit: 0.2 mm

5. If the differential gear backlash exceeds the limit, adjust the backlash by replacing the side gear spacers.
6. If adjustment is not possible, replace the side gears and pinion gears as a set.
7. After adjustment, check that the backlash does not exceed the limit and the differential gear turns smoothly.

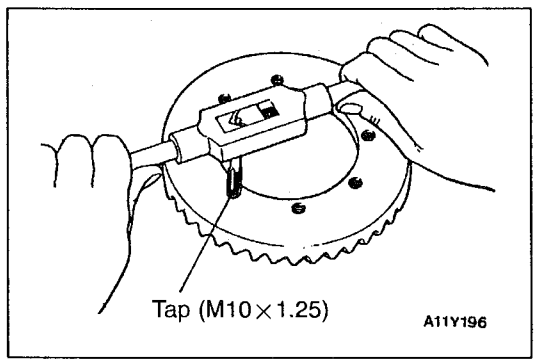

▶F◀ DRIVE GEAR INSTALLATION

1. Clean the drive gear attaching bolts.
2. Remove the adhesive adhered to the threaded holes of the drive gear by using a tap, and then clean the threaded holes by applying compressed air.
3. Install the drive gear onto the differential case with the mating marks properly aligned.

   Tightening torque: 78 – 88 Nm

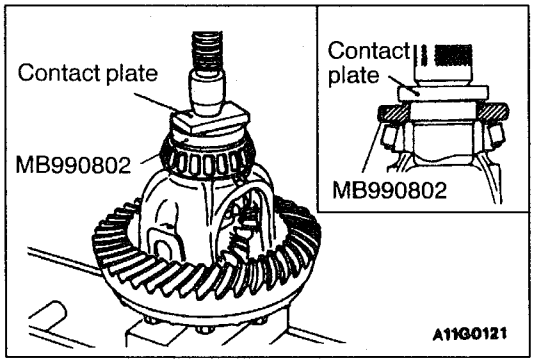

▶G◀ SIDE BEARING INNER RACE INSTALLATION

Use the special tool to press-fit the side bearing inner races into the differential case.

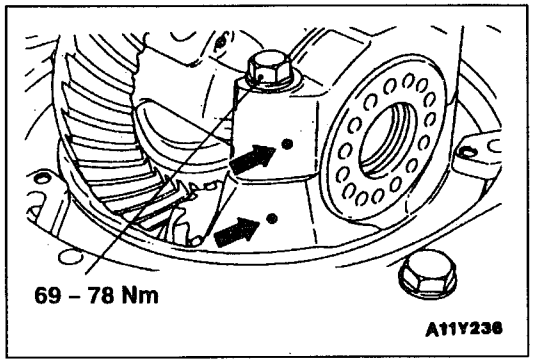

▶H◀ BEARING CAP INSTALLATION

Install the bearing caps with the mating marks properly aligned, and then tighten the bearing caps installation bolts to the specified torque.

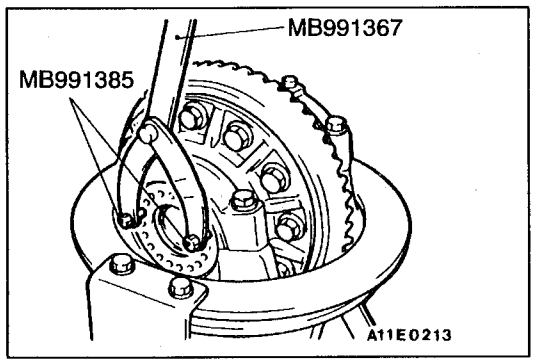

▶I◀ DRIVE GEAR BACKLASH ADJUSTMENT

Adjust the drive gear backlash by the following procedures:

1. Use the special tools to tighten the side bearing nut to the position where a preload will start to be applied to the side bearing.

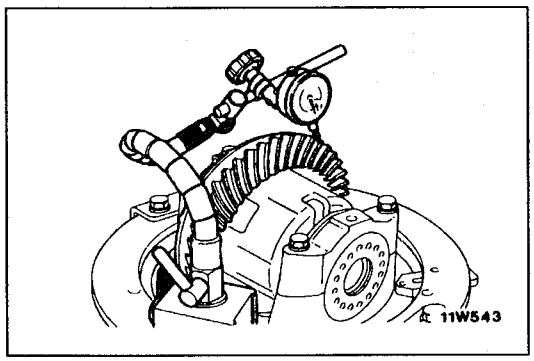

2. With the drive pinion locked in place, measure the drive gear backlash with a dial indicator on the drive gear.

   NOTE
   Measure at four points or more on the circumference of the drive gear.

   Standard value:
   0.11 – 0.16 mm <4G1>
   0.08 – 0.13 mm <4G9>

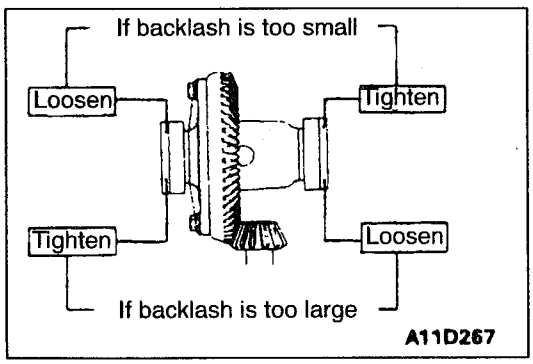

3. If the drive gear backlash is not within the standard value, use the special tools (MB991367 and MB991385) to tighten or loosen the side bearing nuts as shown in the illustration, in order to adjust the backlash.

   NOTE
   First loosen the side bearing nut, then tighten the side bearing nut the same amount as when it was loosened.

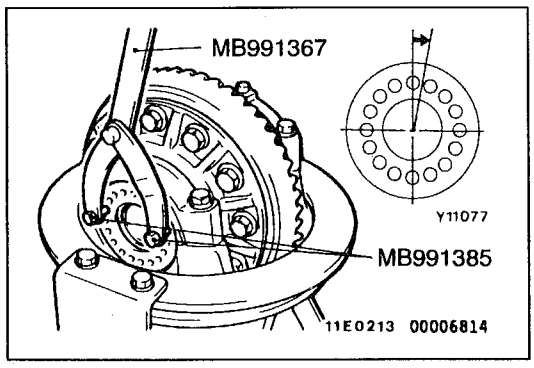

4. Use the special tools to turn down both right and left side bearing nuts on half the distance between centres of two neighboring holes, in order to apply the preload to the side bearing.

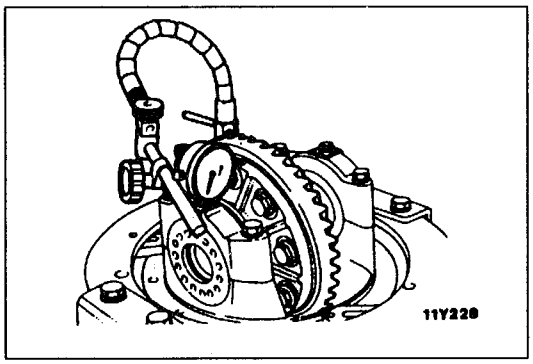

5. Measure the drive gear runout at the shoulder on the reverse side of the drive gear.

   Limit: 0.05 mm

6. If the drive gear runout exceeds the limit, reinstall by changing the phase of the drive gear and differential case, and remeasure.
7. If adjustment is not possible, replace the differential case or limited slip differential case, or replace the drive gear and drive pinion as a set.

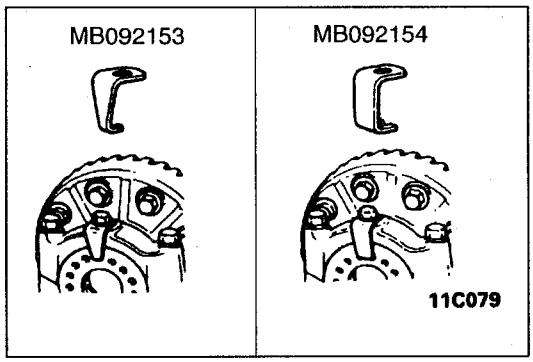

8. Select either of the lock plates, and then install it.
9. Check the drive gear tooth contact. If poor contact is evident, adjust the drive gear tooth contact. (Refer to GROUP 26 – Differential carrier.)

LSD ASSEMBLY

DISASSEMBLY AND REASSEMBLY

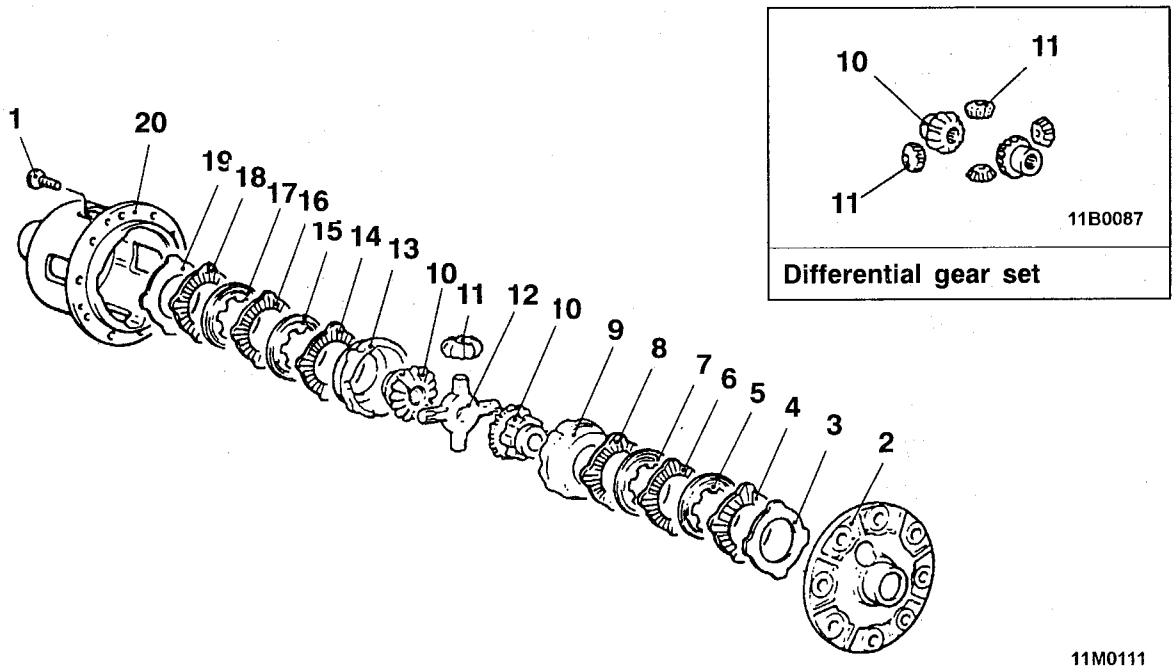

Disassembly steps

- ▶C◀ • LSD differential torque check
- ◀A▶ ▶B◀ 1. Screw
2. Differential case A
3. Spring plate
4. Friction plate
5. Friction disc
6. Friction plate
7. Friction disc
8. Friction plate
9. Pressure ring
10. Side gear
11. Pinion gear
12. Pinion shaft
13. Pressure ring
14. Friction plate
15. Friction disc
16. Friction plate
17. Friction disc
18. Friction plate
19. Spring plate
- ▶A◀ 20. Differential case B

DISASSEMBLY SERVICE POINTS

◀A▶ SCREW REMOVAL

1. Make sure that the mating marks are properly aligned.
2. Loosen the differential case A-to-B screws progressively and evenly.
3. Separate differential case A from differential case B to take out the internal components.
   Then keep the spring plates, friction plates and friction discs in order so that they may be reinstalled in the same order.

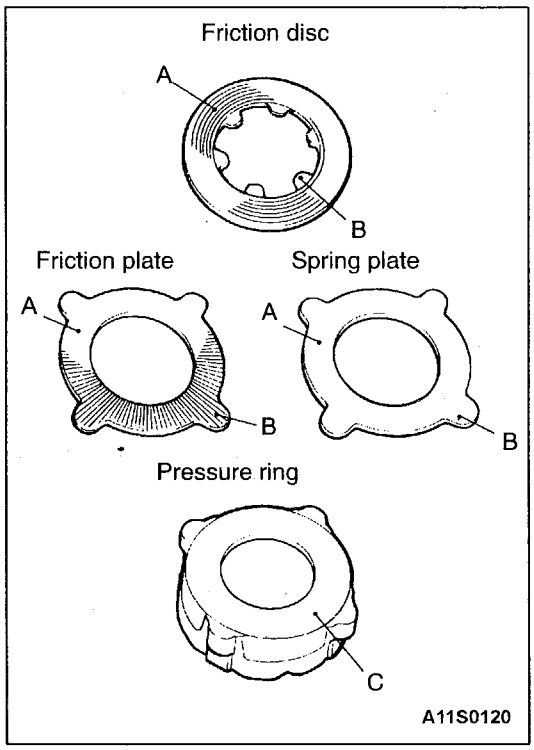

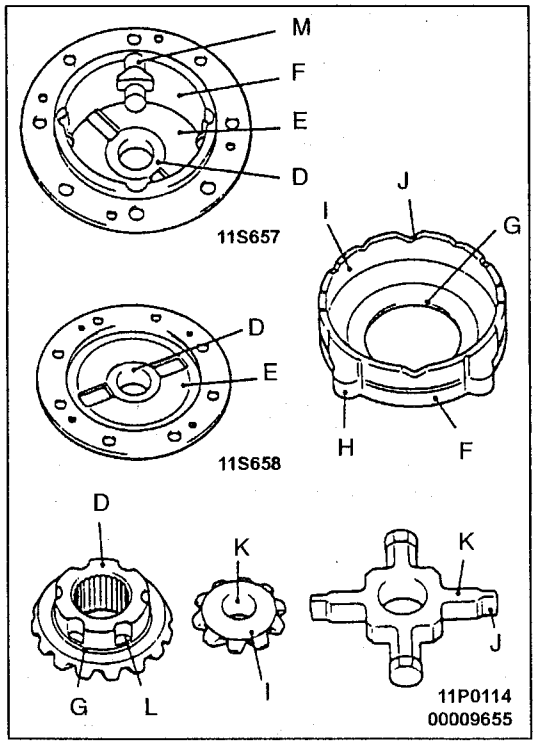

INSPECTION

CONTACT SURFACE OF DIFFERENTIAL CASE INTERNAL COMPONENTS

1. Clean the internal components in a solvent, and dry them with compressed air.
2. Check each plate, disc and pressure ring as follows:
   A. The friction surfaces of the friction discs, friction plates and spring plates
      If there are any signs of seizure, severe friction, or discoloration from overheat, it will adversely affect the locking performance: replace the part with a new one.

      NOTE
      The strong contact on the inner circumference of the friction surfaces is because of the spring plate; this wear is not abnormal.

   B. The tabs on the outer and inner circumference of the friction disc, friction plate and spring plate
      If there are cracks or damage on a part, replace it with a new one.
   C. The friction surface between the friction disc and the pressure ring
      If there are scratches and dents on a part, resurface it with an oil stone; repair the part by first grinding with an oil stone and then polishing with rubbing compound on a surface plate.

      NOTE
      The strong contact on the inner circumference of the friction surface is because of the spring plate: this wear is not abnormal.
3. Check the contact and sliding surfaces listed below, and repair any nicks and burrs by using an oil stone.
   D. The contact surface between the side gear and the differential case
   E. The contact surface between the differential case and the spring plate
   F. The contact surface between the pressure ring and the differential case inside surface
   G. The sliding surface between the pressure ring and the side gear
   H. The tabs on the outer circumference of the pressure ring
   I. The spherical surface of the differential pinion gear and the inner diameter of the pressure ring
   J. The V-shaped groove in the pressure ring, and the V-shaped part in the pinion shaft
   K. The outer diameter of the pinon shaft and the hole of the differential pinon gear
   L. The outer circumference groove of the side gear
   M. The inner circumference groove of the differential gear

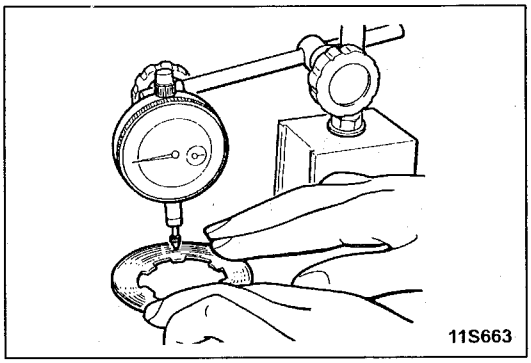

WARPING OF THE FRICTION PLATE AND FRICTION DISC

Using a dial indicator, measure the amount of warping (the flatness) of the friction plate and the friction disc on a surface plate by turning the friction plate or disc.

Limit: 0.08 mm (total warping)

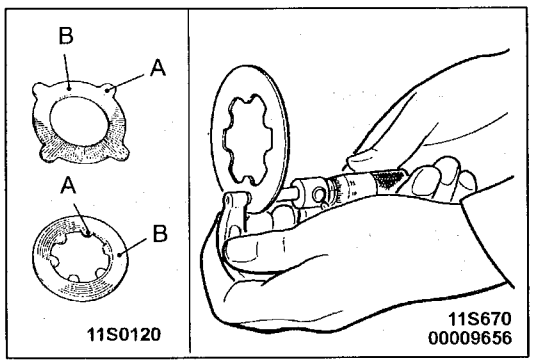

WEAR OF THE FRICTION PLATE AND FRICTION DISC

1. In order to measure the wear, measure the thickness of the friction surfaces and tabs of the friction disc and plate, and then find the difference.

   Limit: 0.1 mm

2. If the parts are worn beyond the allowable limit, replace them with new parts.

REASSEMBLY SERVICE POINTS

▶A◀ ASSEMBLE INTO DIFFERENTIAL CASE B

Before assembly, adjust the clearance between the spring plates and differential cases (for adjustment of the clutch plate friction force), and to adjust the axial play of the side gear when installing the internal components into the differential case.

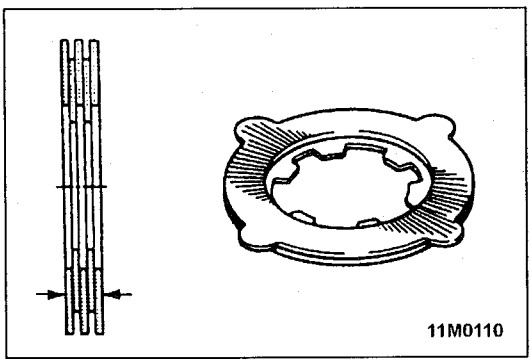

1. Arrange the two friction discs and the three friction plates for each side, one on top of another, as shown in the illustration, combining them so that the difference in thickness between the left and the right is the standard value.

   Standard value: 0 – 0.05 mm

   NOTE
   When the friction disc is replaced, two kinds are available, 1.6 mm and 1.7 mm.

2. Measure the thickness of the spring plate at right and left sides.

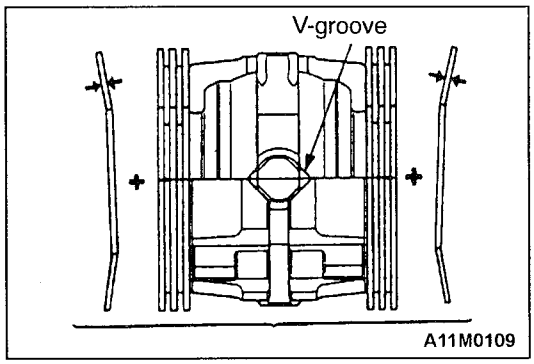

3. Assemble the pressure ring's internal components (differential pinion shaft and pressure ring) and the friction discs and friction plates, and then as shown in the illustration, measure the overall width.

   NOTE
   Compress the pressure ring's internal components securely when the width is measured.

4. Calculate total value (A) of the thickness of the two sets of spring plate plus the value measured in (3) above.

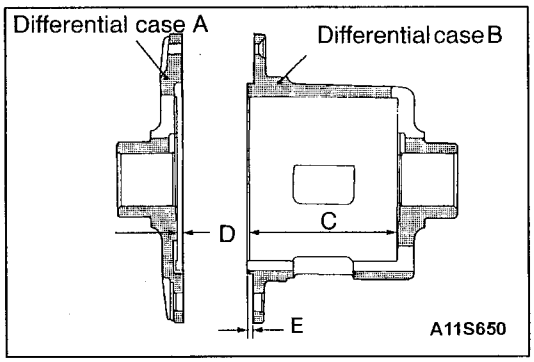

5. Obtain dimension (B) between the spring plate contact surfaces when differential cased (A) and (B) are combined.
   B=C+D–E
6. Change the thickness of the friction disc so that clearance (B–A) between the differential case and the spring plate is at the standard value.

   Standard value: 0.06 – 0.25 mm

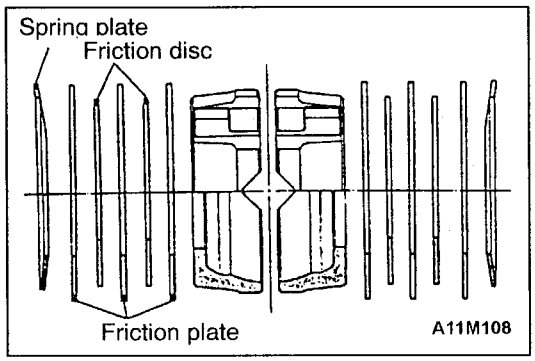

7. Apply the specified gear oil to each component, and then assemble the components in the shown order and direction into differential case B.

   Specified gear oil:
   Hypoid gear oil MITSUBISHI Genuine Gear oil Part No. 8149630 EX, CASTROL HYPOY LS (GL-5, SAE90), SHELL-LSD (GL-5, SAE 80W-90) or equivalent

   NOTE
   Be sure to clean the contact surfaces and moving parts thoroughly.

▶B◀SCREW TIGHTEN

1. Matchmark differential cases A and B.
2. Tighten differential cases A and B diagonally and progressively.

   NOTE
   If differential cases A and B can not be combined properly after tightening the screws, the spring plates may be improperly assembled. In this case, unscrew the part and tighten the screws again.

▶C◀LSD DIFFERENTIAL TORQUE CHECK

Refer to P.27-9.

NOTES